© 2009 UES (INT'L) PTY LTD



# Swing Hinge Kits

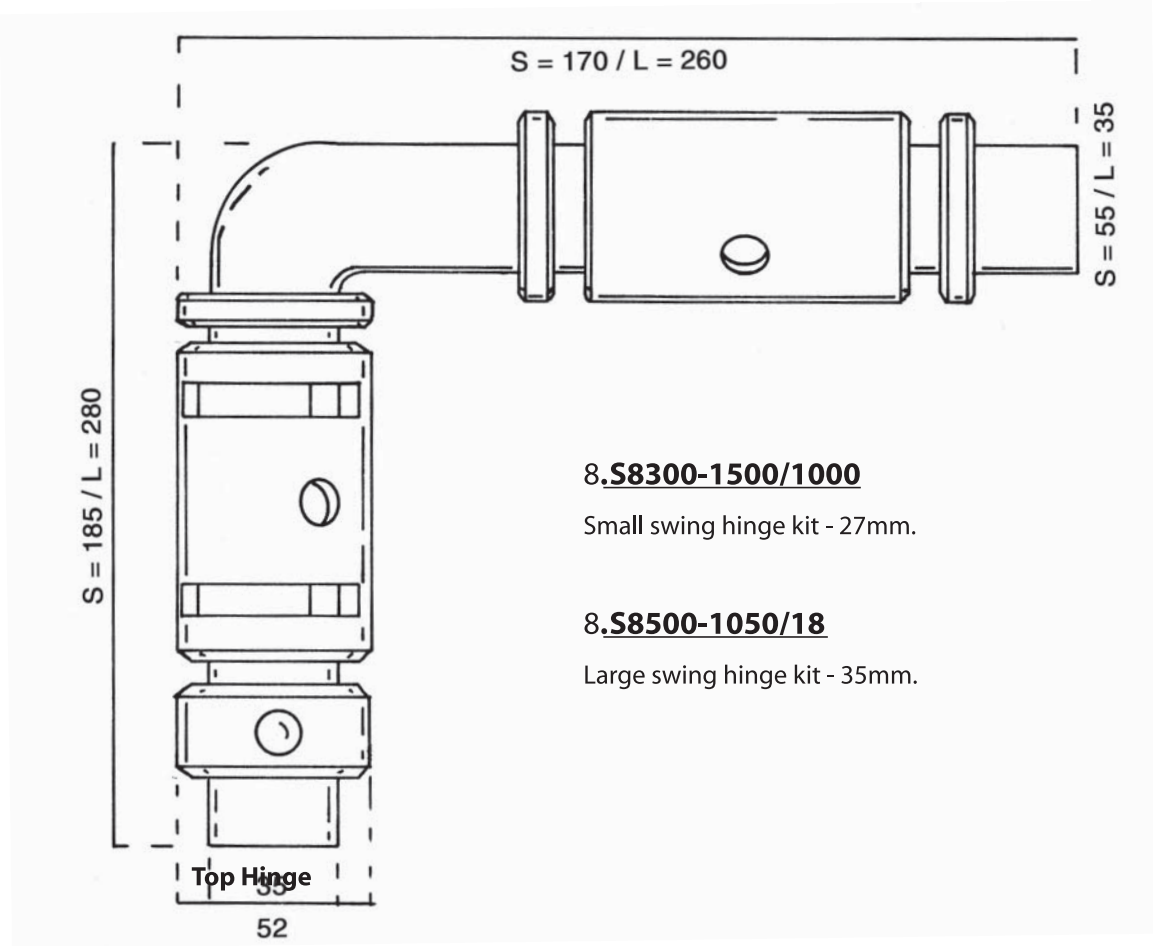


Top Hinge

8.**S8300-1500/1000**

Small swing hinge kit - 27mm.

8.**S8500-1050/18**

Large swing hinge kit - 35mm.

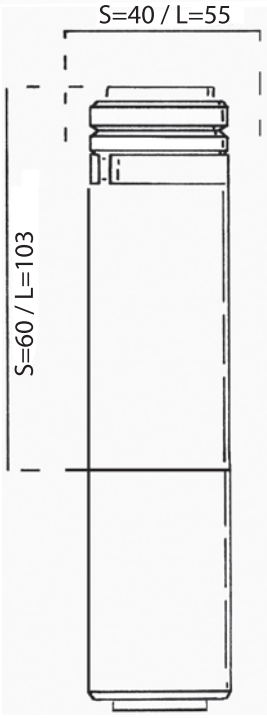


Bottom Hinge

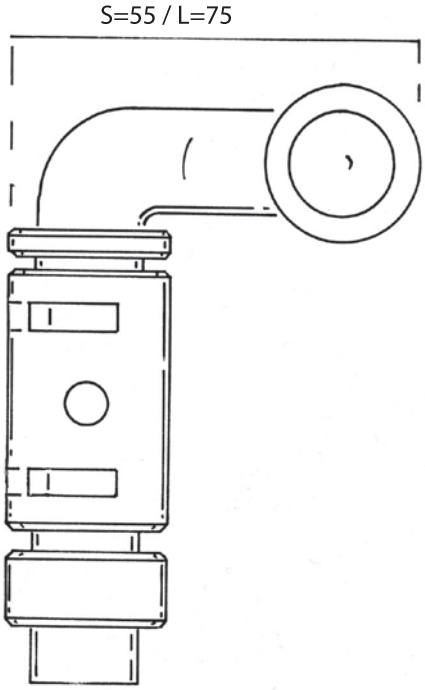


Side View

HEAD OFFICE
T: +61 02 8887 1200
F: +61 02 8887 1249
E: export@uesint.com

NEW SOUTH WALES
T: +61 02 8787 6500
F: +61 02 8787 6599
E: uesnsw@uesint.com

QUEENSLAND
T: +61 07 3623 5800
F: +61 07 3865 5605
E: uesqld@uesint.com

VICTORIA
T: +61 03 8787 3100
F: +61 03 8787 3101
E: uesvic@uesint.com

SOUTH AUSTRALIA
T: +61 08 8340 1599
F: +61 08 8340 4423
E: uessa@uesint.com

WESTERN AUSTRALIA
T: +61 08 9249 2211
F: +61 08 9249 2022
E: ueswa@uesint.com

NORTHERN TERRITORY
T: +61 08 8946 4500
F: +61 08 8946 4555
E: uesnt@uesint.com

NEW ZEALAND
T: +64 09 633 4019
F: +64 09 633 0249
E: uesnz@uesint.com